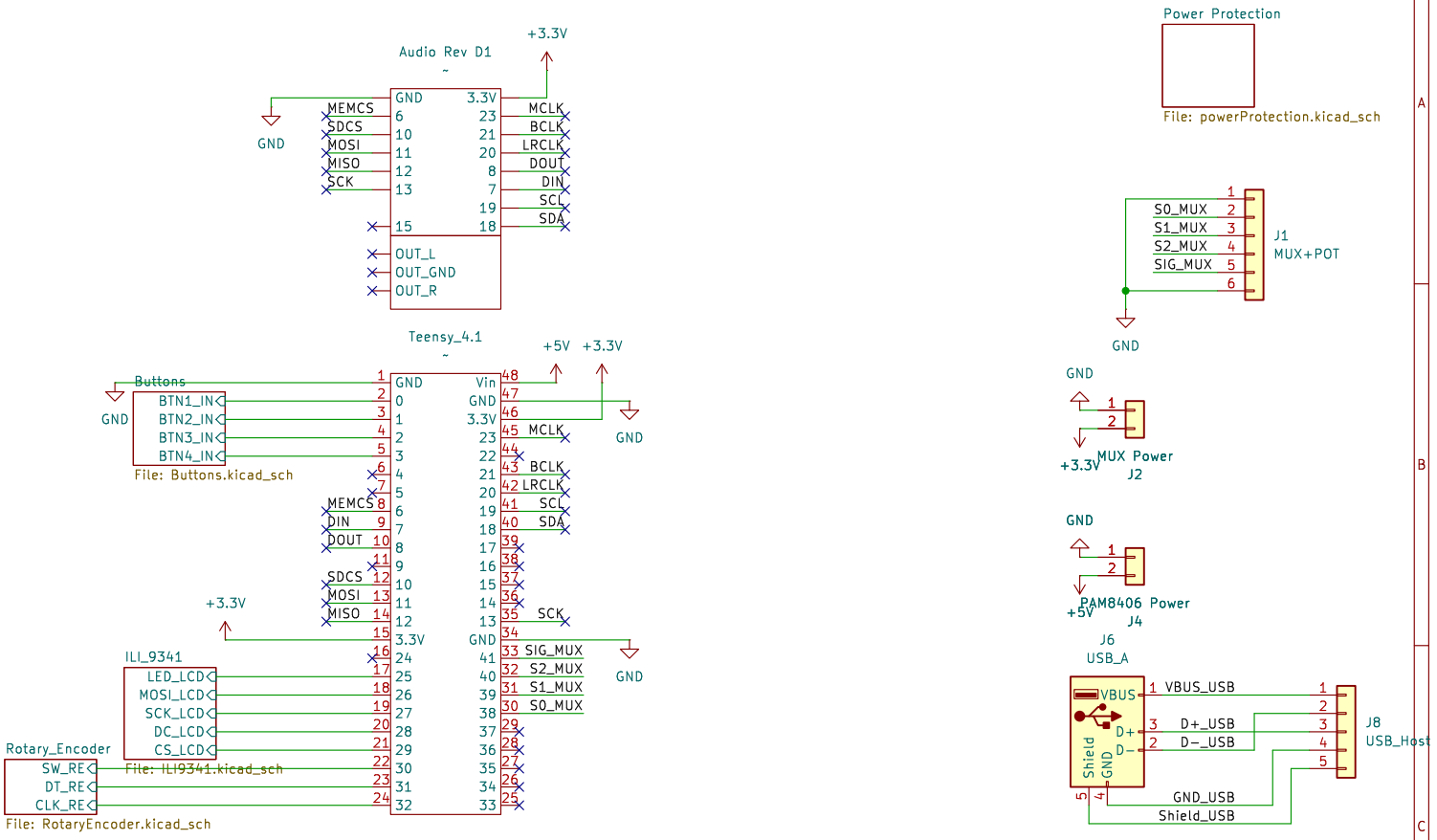

Sheet: /
File: Compact Keyboard.kicad_sch

Title: Compact Keyboard

Size: A4	Date: 2026-02-28	Rev:
KiCad E.D.A. 9.0.4		Id: 1/5

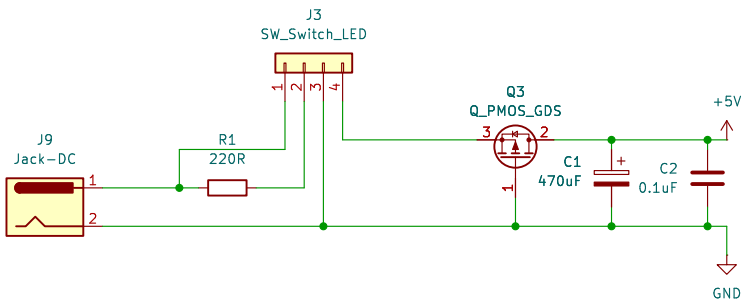

Sheet: /Power Protection/
File: powerProtection.kicad_sch

Title:

Size: A4	Date:	**Rev:**
KiCad E.D.A. 9.0.4		Id: 2/5

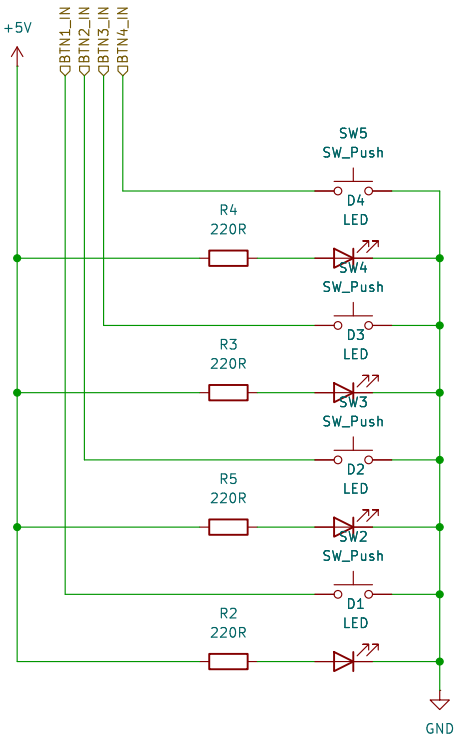

Sheet: /Buttons/
File: Buttons.kicad_sch

Title:

Size: A4	Date:	**Rev:**
KiCad E.D.A. 9.0.4		Id: 3/5

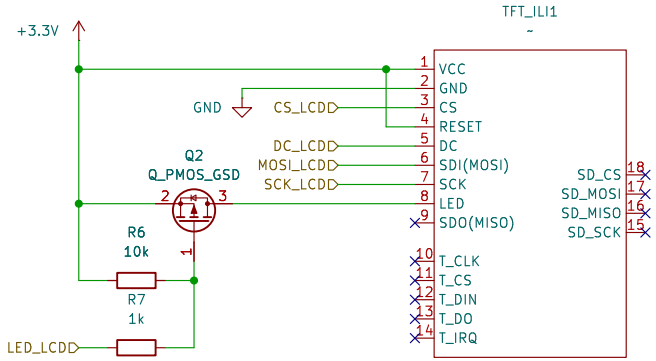

Sheet: /ILI_9341/
File: ILI9341.kicad_sch

Title:

Size: A4	Date:	**Rev:**
KiCad E.D.A. 9.0.4		Id: 4/5

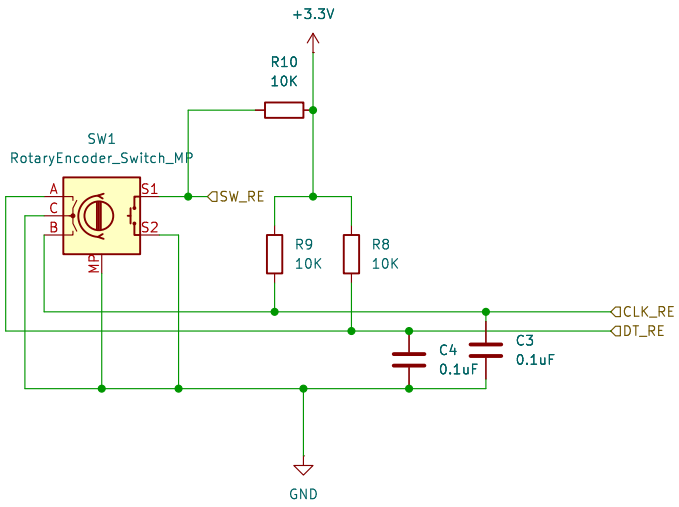

Sheet: /Rotary_Encoder/
File: RotaryEncoder.kicad_sch

Title:

Size: A4	Date:	Rev:
KiCad E.D.A. 9.0.4		Id: 5/5